SIMON
NBA-SI1600

alta by nella

BASE CABINET PLAN

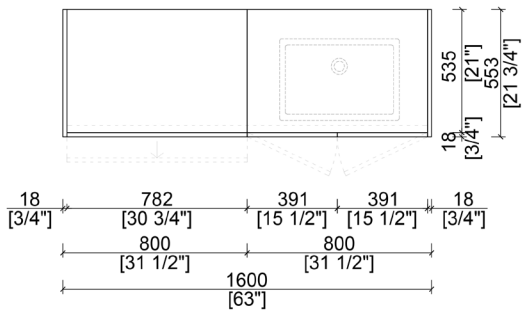

FRONT ELEVATION

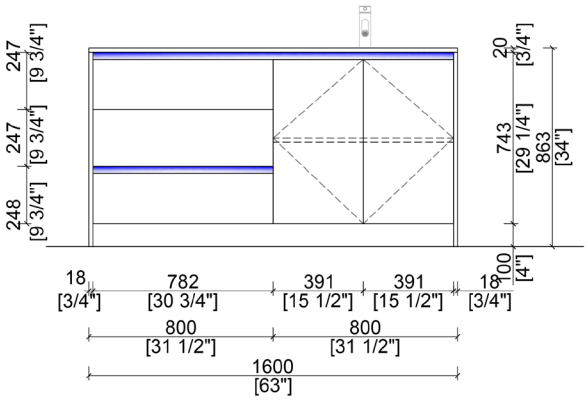

FEATURES

- Simple and Clean Modular Design
- Floor mount models
- Combination of swinging doors and drawers
- Integrated profile door pulls or surface mount pulls available

AVAILABLE FINISHES

- Available in a wide variety of lacquer, melamine, and natural wood veneer

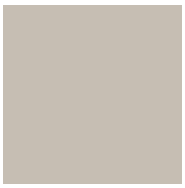

- To see the full selection of colors and finishes, please follow the link to Cabinetry Finishes.

USA/CANADA: www.nellabath.com