FIORE™

www.fiorelife.com

ARTI **KITCHEN SINK**

FI90302700

FEATURES:

16 gauge premium 304 grade stainless steel (18/10 Chromium/Nickel)

Satin Polish Finish

Heavy duty sound guard absorption and undercoating

Micro Corner /Zero Radius- Perfectly straight interior corners for a truly avant-garde look.

Exterior dimensions: 34 1/2" x 20 1/8" / 875mm x 510mm

Interior dimensions: 17 3/4" x 15 3/4" / 452mm x 400mm
13 1/4" x 15 3/4" / 337mm x 400mm

Bowl Depth: 9"

SUPPLIED ACCESSORIES:

Cut-out template

Mounting brackets

Fiore Premium Basket strainer
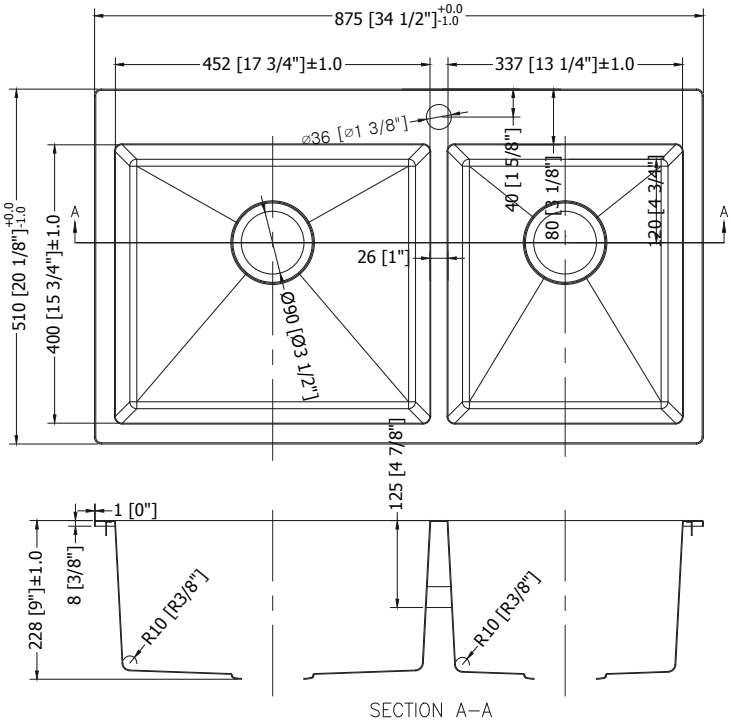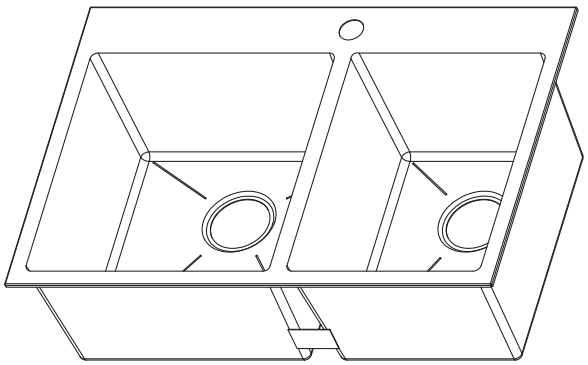
Fiore Bottom Rinse Grid and Protector